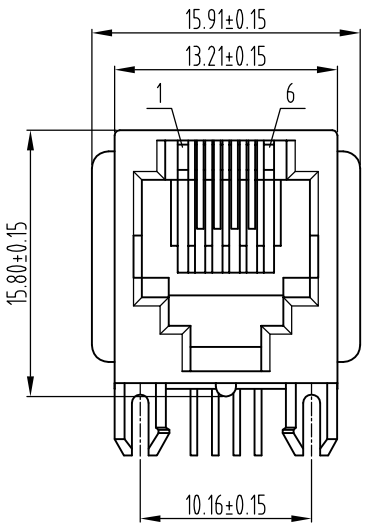

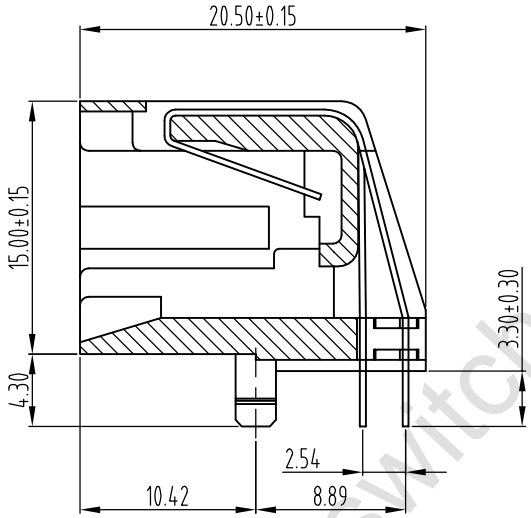

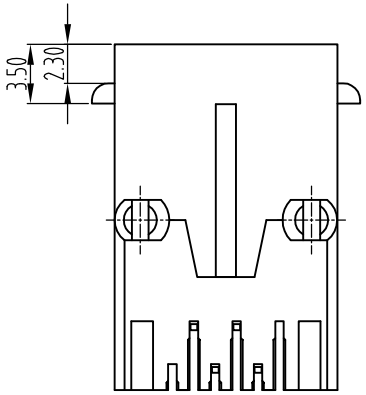

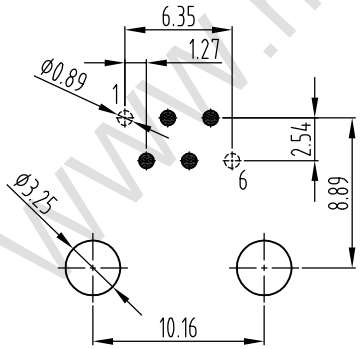

PCB LAYOUT/TOP VIEW

NOTES:

MATERIAL:

1.HOUSING		:GLASS FILLED POLYESTER UL94V-0
2.CONTACT	(PLAT PIN T=0.35mm)	:PHOSPHOR BRONZE WITH GOLD PLATING OVER NICKEL.

ELECTRICAL:

1.VOLTAGE RATING	:125V AC.
2.CURRENT RATING	:1.5AMP.
3.CONTACT RESISTANCE	:30 MILLIOHMS MAX.
4.INSULATION RESISTANCE	:500 MEGOHMS MIN @ 500V DC.
5.DIELECTRIC WITHSTANDING VOLTAGE	:1000V AC RMS 50Hz OR 60Hz. 1MIN.

MECHANICAL:

1.INSETION FORCE	:2.2Kg MAX.
2.RETENTION STRENGTH	:7.7Kg BETWEEN JACK AND PLUG
3.DURABILITY	:750 CYCLES MINI.

ENVIRONMENTAL:

1.STORAGE	: -40℃~+85℃.
2.OPERATION	: -40℃ TO 85℃.

THE MARTS MODULAR PLUG CONFORMAING TO FCC PART68

PART NUMBER:

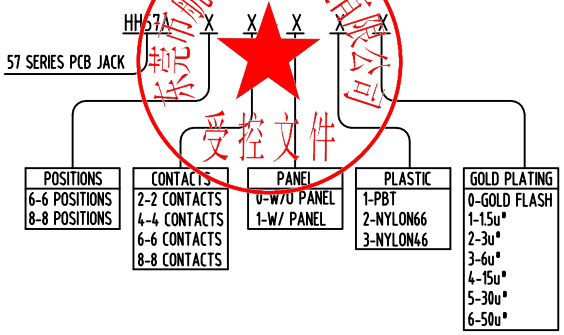

东莞市航宏电子科技有限公司
受控文件

www.hhswitch.com

DESIGN	MISS ZENG	SC ALL		未注公差 TOOLERANCE		品名：	网口连接器
DRAWIGN	MISS LI	ANIT	MM	.0 ±0.20	ANGLES ±5°		
CHECK	Mr. ZENG	SIZE	A4：210*297	.00 ±0.15		型号：	HH57A64-1XX
APPROVAL		VERSION	01	.000 ±0.1			

东莞市航宏电子科技有限公司
Dongguan Hanghong Electronics Co., Ltd.